EMC Basic Course
Experiment Descriptions

Frits J.K. Buesink M.Sc.
University of Twente
Enschede, the Netherlands

October 4, 2012

Chapter 1

Experiments

1.1 Introduction

For the EMC course at SMU in April 2011, demonstrations will be done during the lectures in the classroom. There is a risk however, that the students may not grasp the complete message of each experiment until they have done the experiments themselves. This document proposes the construction of a sufficient number of (e.g. 20) sets of experiment to be used by the students to do experiments in the afternoon lab sessions. They are based on sets of experiments already in use in the Netherlands. A number of experiment sets have been fabricated in 2011. But for about 70 students at least 20 complete sets are necessary (a simple AM-FM radio, 2 channel oscilloscope 200 MHz USB, Experiment generator, cable sets, power supply for generator and a complete set of special experiment cables as described below in this document, special sheet metal brackets and cable tray, $50\ \Omega$ loads and four BNC-BNC cables to connect the equipment to generator and scope, per group of 3 to 4 students).

1.2 Instrumentation

Table 1.1 lists the basic instrumentation to perform the experiments described in this document. For the students experimenter sets the Multimeter is not necessary (it is assumed there is one meter available to check in case of problems of voltage and/or contact resistance).

Table 1.1: Instrumentation for EMC Experiment Kit

Description	pieces	Order No.
USB Oscilloscope DSO-5200A		
with two channels $200\ [MHz]$ powered by USB	1	Conrad #122436-89
Mains Power Distribution Outlet 3 x with PE	1	Farnell #1289428
(Any)Digital Pocket Multimeter to check voltage or resistance	1	e.g. 3421491
Square Wave Test Generator	1	see Section 1.4.7

1.3 EMC Experiment Set

1. Simple portable AM/FM Radio with built in speaker (any brand).
2. Test wire red and test wire black 1 [m] each with 2 BNC plug (male)
3. Test wire red 4 [m] (induction) with 2 BNC plug (male)

4. Litz wire with 6 mm lugs 1 [m] (common-impedance crosstalk)
5. Twisted pair cable AWG 20 or 22 1 [m] with 2 BNC plug (male)
6. Twisted pair cable AWG 24, 4 [m] with 2 BNC plug (male)
   for undershoot demo transmission-line
7. Cable Tray, see Section 1.4.1
8. Metal tube dia 70 [mm] x 150 [mm] (shielding demo)
9. B-dot loop-probe, made of coax, ring diameter 40 [mm]. See Section 1.4.9
   (needs 50Ω BNC plug Farnell code 1169699)
10. B-dot probe, Ferrite U-core 12 mm with 5 turns AWG 30. See Section 1.4.9
11. D-dot probe, brass rod dia 3 [mm] length 60 [mm], see Section 1.4.9
12. Current probe Ferrite ring with coil & BNC jack, see Section 1.4.9
13. Clip-on type common-mode ferrite choke, Farnell order code 1463448
14. 9V Battery clip with 5.5/2.1 mm power plug

1.4 Experiment Drawings

1.4.1 Cable Tray

The basis for all experiments is formed by a metal cable tray with two, so called, “current boundaries”. The student versions used in the Netherlands are made to the drawing shown in Figure 1.1 on page 3. Note that the drawing with the measures shows the sheetmetal before bending. The size is intended for the use of 1 [m] long cables with BNC plugs. The tray material can be aluminium or stainless steel.
Alternative: use a cable tray as shown in Figure 1.2 on page 3.
Figure 1.3 on page 4 provides some details of the construction.
The width of the tray is not really critical as long as it is so long in the finished version that a 1 [m] long cable can be installed in it. When mounted in the tray, the cables should lay against the tray over 90% of their lengths. This should then look as shown in Figure 1.4 on page 4. The connectors used are “BNC adaptors jack-jack (bulkhead)”, available from Farnell.com, Take note, that Farnell sells these items without the also required nut and washer. Table 1.2 shows the purchase items needed to build 8 cable trays (including the nuts and washers). 20 Cable trays are suitable for classes between 40 (2 students per tray) and 80 (4 students per tray) students. The purchase list assumes cable trays conform Figure 1.2 on page 3. This only affects the number of M6 bolts.

Item	Description	pieces	Farnell Order No.
1	BNC adaptors jack-jack (bulkhead)	80	1248991
2	Nut for BNC adaptors	80	1020969
3	Washer for BNC adaptors	80	1020970
4	Bolt M6 x 12 [mm] stainless steel	80	any brand
5	Flat Washer M6 stainless steel	80	any brand
6	Nut M6 stainless steel	80	any brand

Table 1.2: Purchase items for 20 Cable Trays

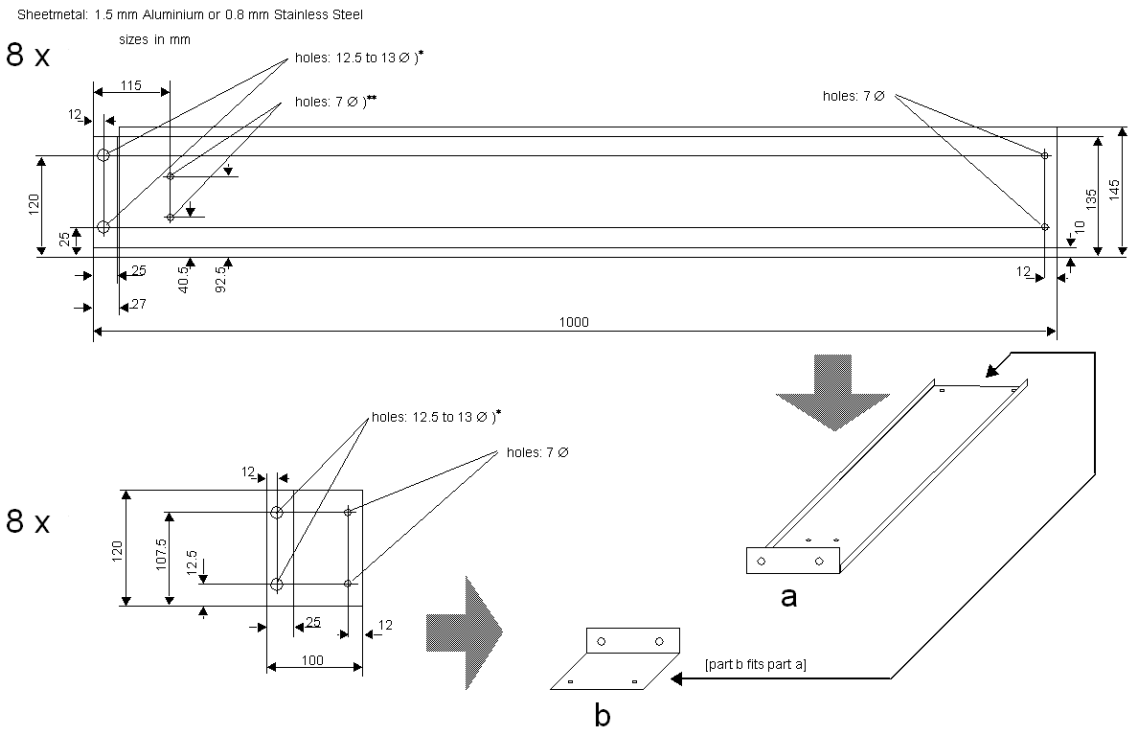

Figure 1.1: Cable Trays for EMC education in the Netherlands

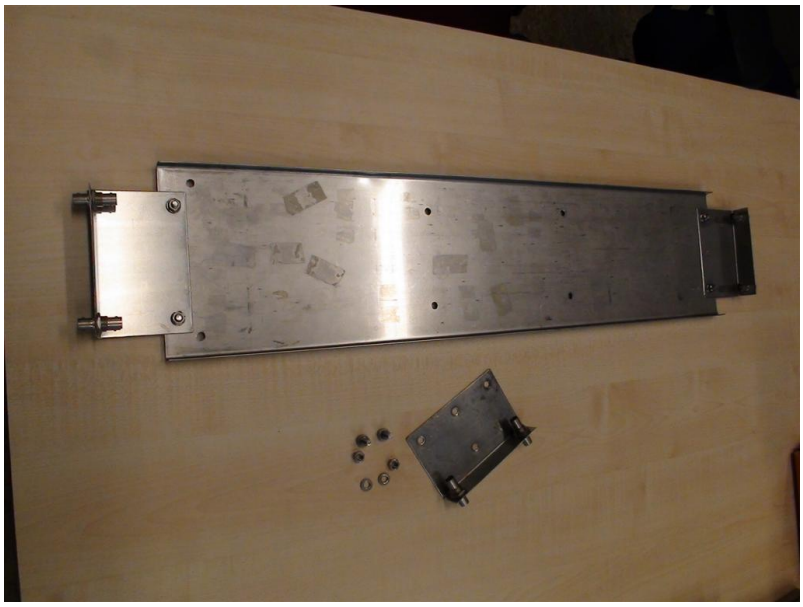

Figure 1.2: Picture of the Alternative Cable Tray

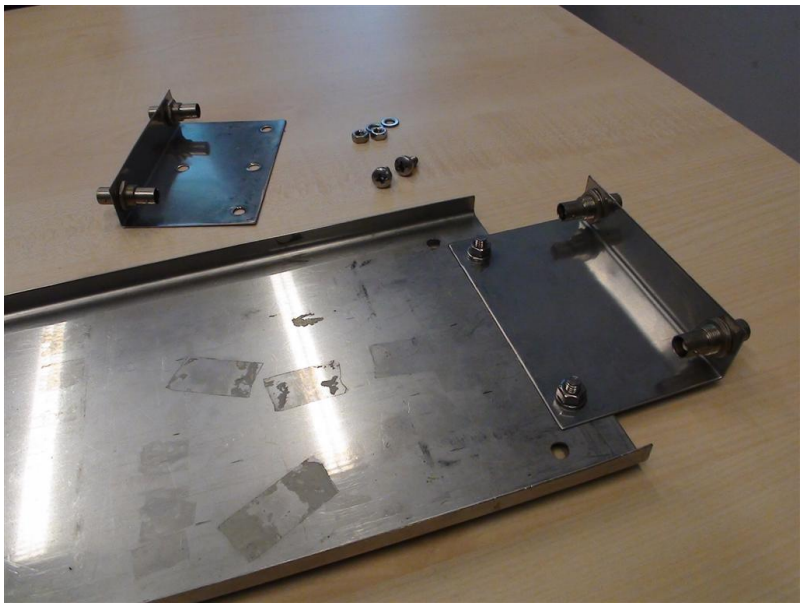

Figure 1.3: Details of the Construction of the Cable Tray; note: the tray shown here is too wide

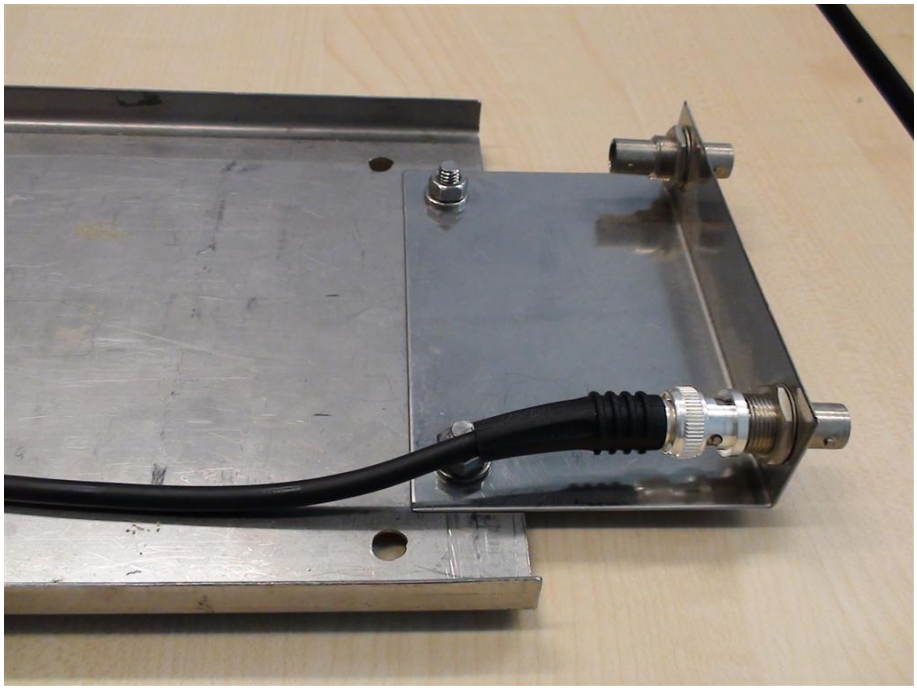

Figure 1.4: Lenght of the trays considering use of 1 [m] cables

1.4.2 Test Cables

Six special test cables are needed. For twenty student group sets 20 of each need to be prepared/fabricated:

1. 1 [m] single wire color red
2. 1 [m] single wire color black
3. 1 [m] of Unshielded Twisted Pairs cable (AWG 22 or 24)
4. 4 [m] of unshielded Twisted Pairs cable (AWG 22 or 24)
5. 1 [m] of coax cable (RG316 or RG58) with a, so called, pig-tail
6. 1 [m] of grounding cable/litz wire 3-4 mm, flexible

A picture of my personal set of cables is shown in Figure 1.5 on page 5.

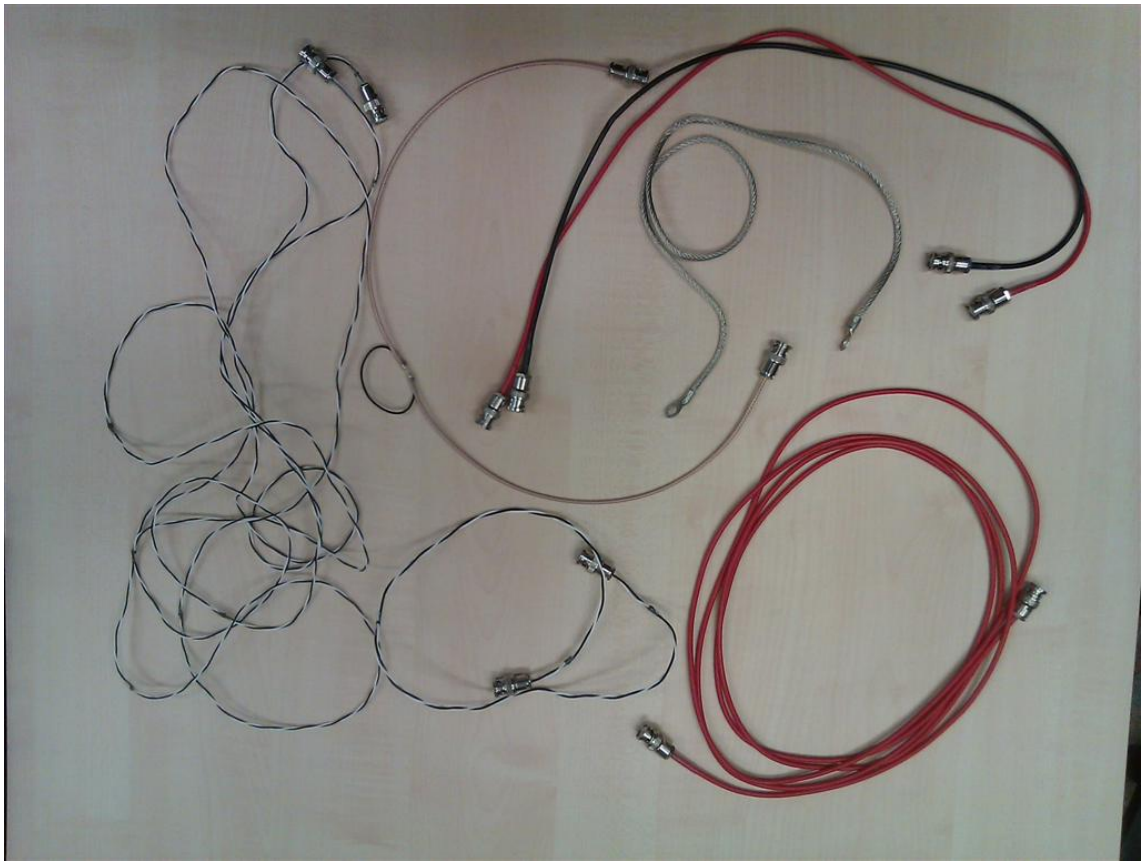

Figure 1.5: My Personal Set of Testcables (to get an idea)

1.4.3 Single Wires

Two 1 [m] length single wires are needed. They are used to explain the initial phases of crosstalk: self- and mutual- induction and capacitance. The best option for the experiments is to have these cables with a BNC plug (male) on each side. This is shown in Figure 1.6 on page 6. They could be standard 1[m] test wires with integrated banana plugs. Four (2 on each side!) Banana to BNC adapters are then needed to connect them to the BNC bulkhead feedthroughs on the cable trays. That idea is shown in Figure 1.7 on page 6. The wires are red and green in the picture. This would be O.K. The idea is to have two *different* colors.

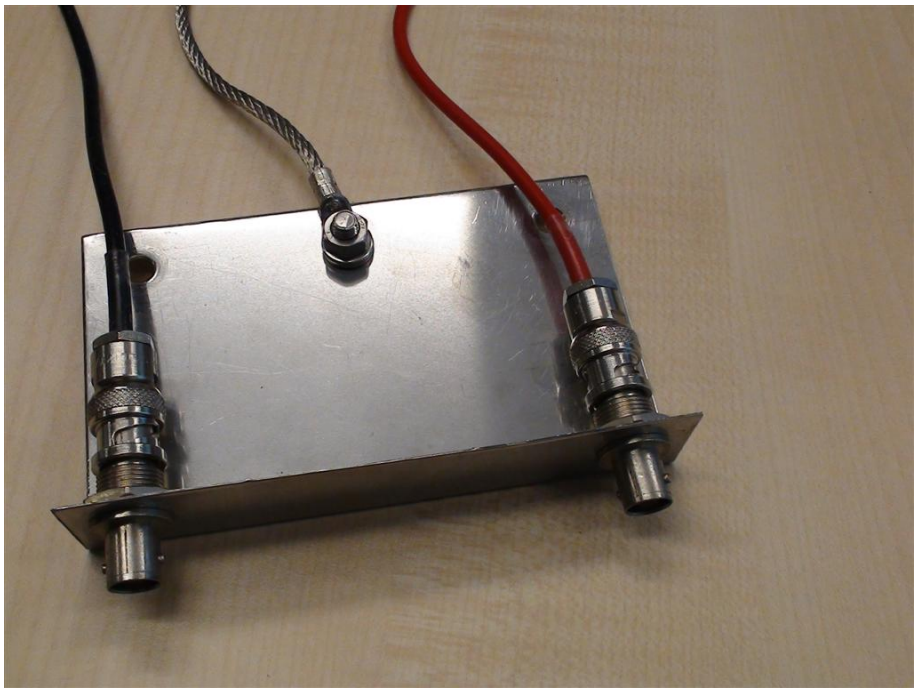

Figure 1.6: Crosstalk Experiment using Single Wires with BNC Connectors

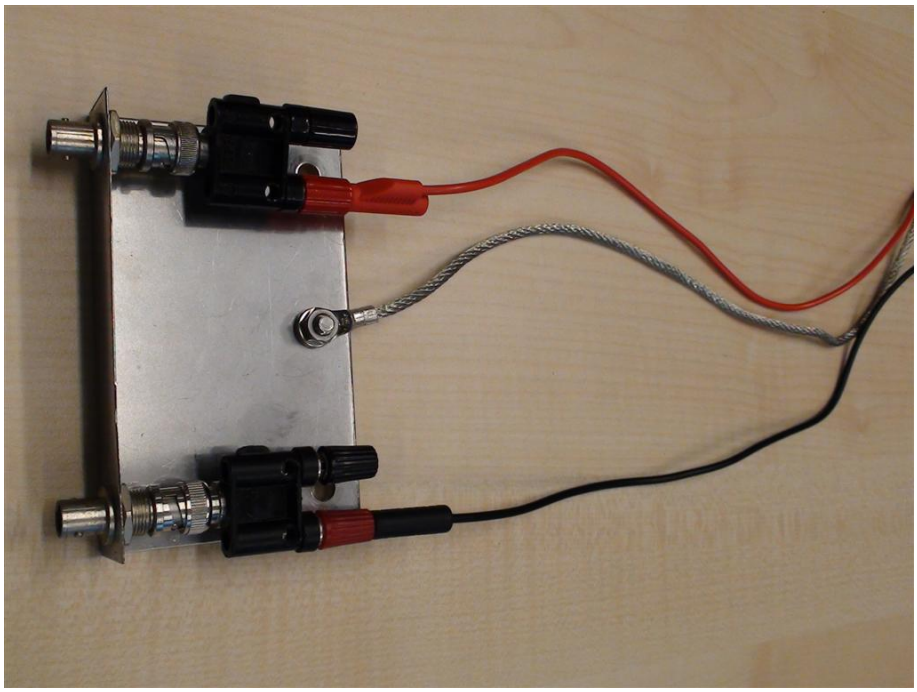

Figure 1.7: Two Single Wires connected to the BNC Bulkhead Feedthrough via a Banana to BNC Adapter

1.4.4 Unshielded Twisted Pairs

Two Unshielded Twisted Pair Cables are used for Crosstalk, Transfer-Impedance and Undershoot experiments. Two lengths are needed: 1 [m] for use in the cable tray and 4 [m] for a transmission (long-) line experiment. A BNC connector should be mounted on each side of these cables. This is shown in Figure 1.8 on page 7. As alternative, this connection could be done using the Banana to BNC adapters shown before. Two adapters are needed per cable. But only one cable is used at a time. This can be the same adapters used for the single wires in Section 1.4.3. Either the wires are clamped as shown in Figure 1.9 on page 8 or banana plugs can be mounted on the ends of the wires. Note that the wires need to be capped as shown in Figure 1.9 on page 8 or provided with banana plugs. Avoid loose wire strands: they will break off or cause injuries.

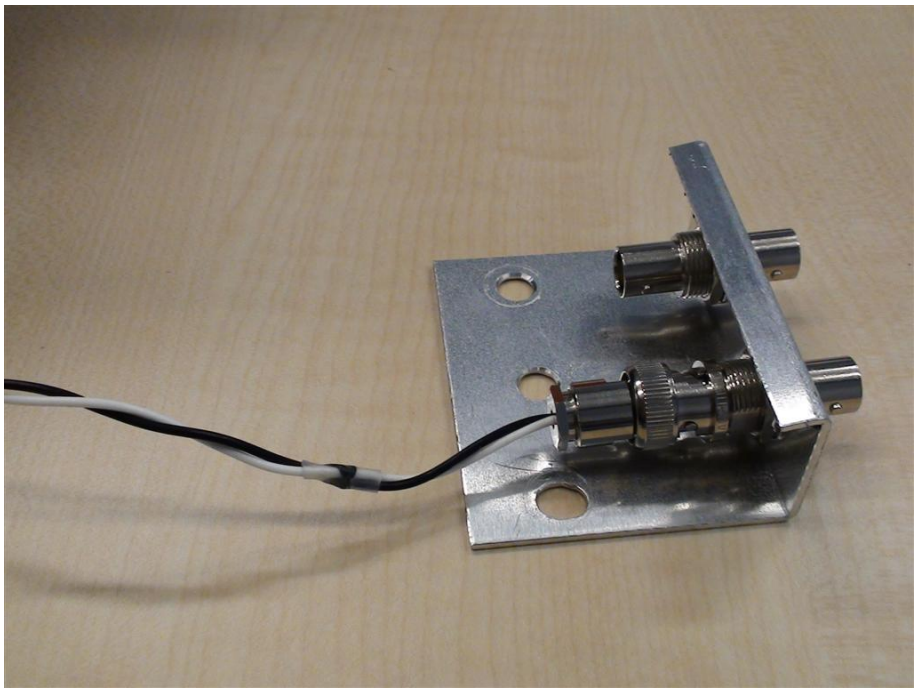

Figure 1.8: UTP cable provided with a BNC connector

1.4.5 Coax with Pig-Tail

An interruption of a coax shield has a severe effect on its shielding properties. The pig-tail illustrates this effect. It is fabricated by removing 3 to 5 [mm] of the shield of a 1 [m] coax cable. The two shield-ends are then interconnected using a 100 [mm] single wire. This is shown in Figure 1.10 on page 8.

The details of a Pig-Tail are shown in Figure 1.11 on page 9.

1.4.6 Grounding Cable

One cable is needed for the Common-Impedance Crosstalk Demo. It is used to connect the two “current boundaries” of the cable tray, when the tray body is not used. It could be any flexible wire but should not be too thin. The version used in the Netherlands is 3.5 [mm] thick and provided with two 6 [mm] eye-lugs to fit on the 6 [mm] bolts. See Figures 1.12 on page 9 and 1.13 on page 11.

1.4.7 The EMI Generator

A small generator is used to simulate three types of output:

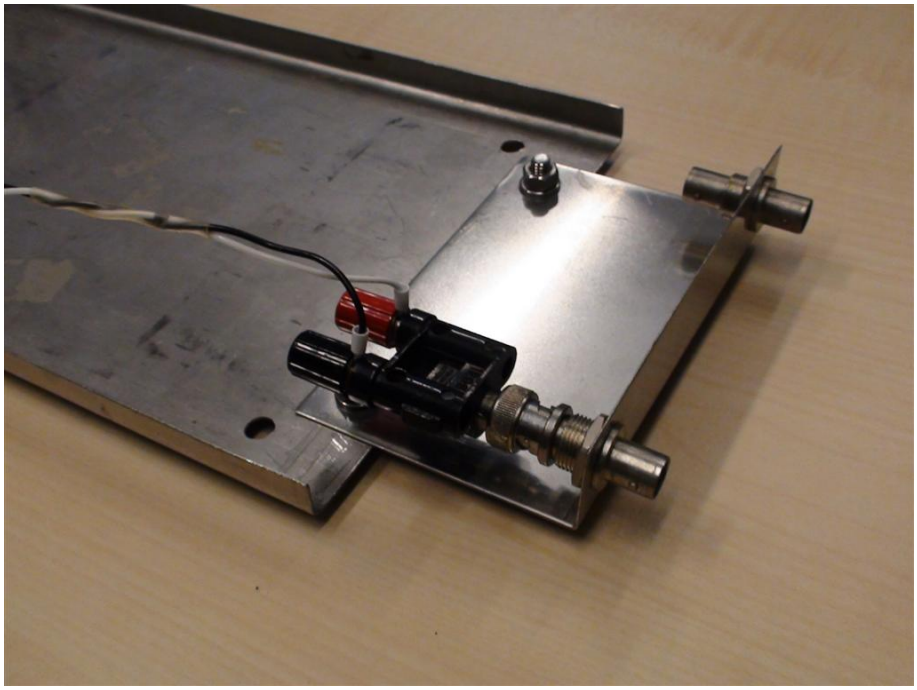

Figure 1.9: Unshielded Twisted Pairs on BNC via Adapter

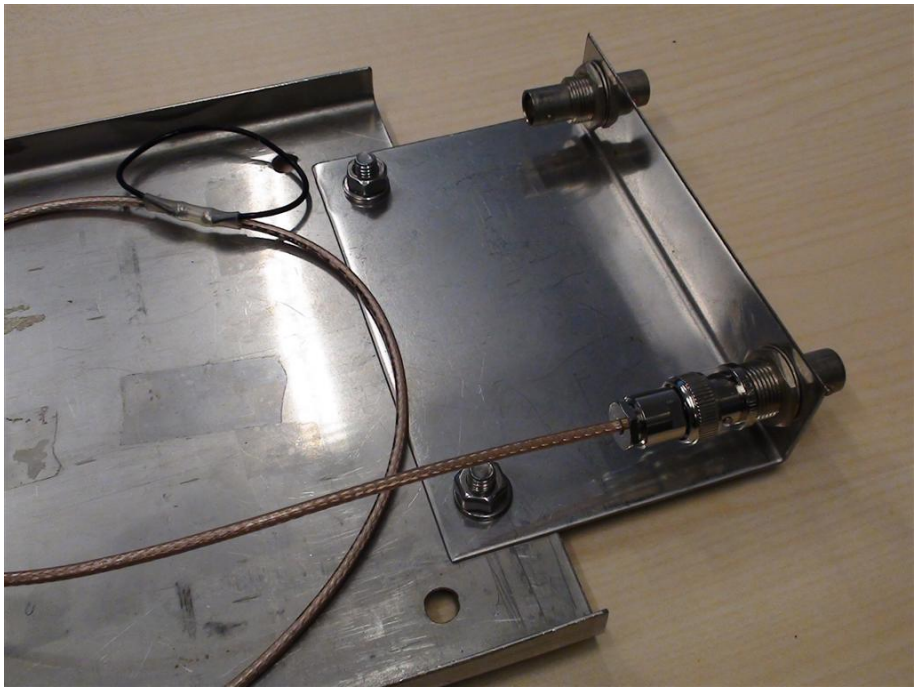

Figure 1.10: RG316 Coax with a Pig-Tail

Figure 1.11: Details of a Pig-Tail

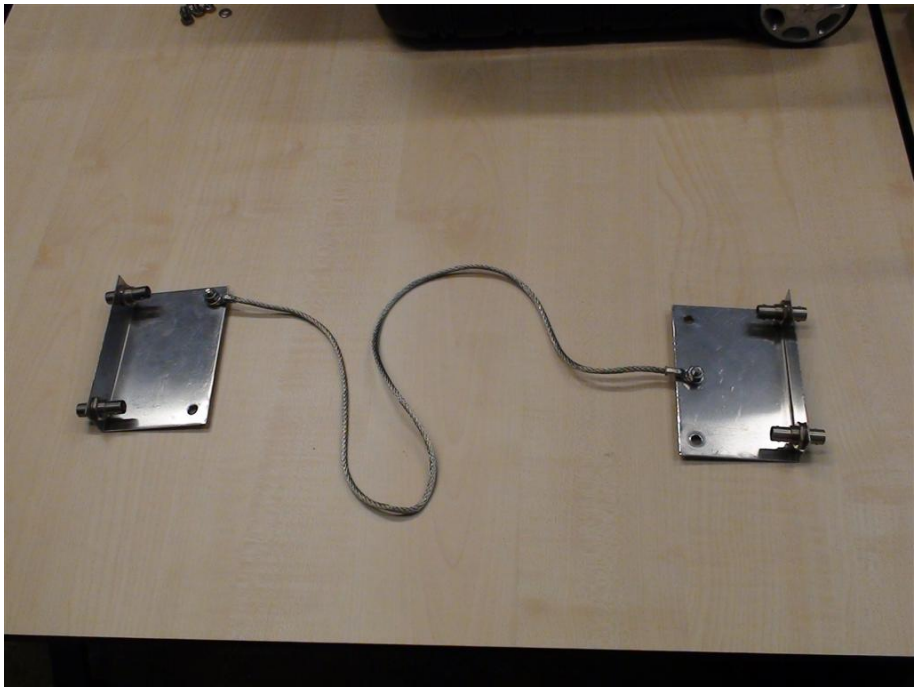

Figure 1.12: The Connection of a Ground Cable

1. A Square wave with a fast risetime ($10\ ns$).
2. A Square wave with a slow risetime ($1\ \mu s$).
3. A Square wave with a fast risetime, AM-modulated with $1000\ Hz$.

The schematic diagram is shown in Figure 1.14 on page 12. For twenty student groups, we need 20 generators.
The parts list can be found in Table 1.3 on page 10

Table 1.3: EMI generator parts list

Part	Value	Package	Farnell Order Code
C1	100N	C-5	–
C2	100N	C-5	–
C3	6N8	C-5	–
C5	100N	C-5	–
D1	1N4148	DO35-7	9843680
D4	1N4007	DO41-10	1467514
IC1	74HC4040N	DIL16	1739757
IC2	74HC194N	DIL16	1740097
IC4	LM1084IT-3.3	TO220	1469037
LED1	Green	LED3MM	1003199
QG1	4 MHz	SG531	1216189
R1	33K	R-10	–
R2	100K	R-10	–
R3	0	R-10	–
R4	∞	R-10	–
R6	330	R-10	–
R7	120	R-10	–
R8	120	R-10	–
R9	330	R-10	–
R14	1K	R-10	–
R17	1K5	R-10	–
S3	DPDT	On-Off-On	9473408
X1	50Ω JACK BNC	RADIALL-R141557000-BULKHEAD	4195140
X4	Connector Power	5.5/2.1 [mm]	1608730
–	Plug for power connector	5.5/2.1 [mm]	1568398
Case	EDDYSTONE70007BOX	50X50X25MM	7626134
Case (optional)	CFL1T	50 x 50 x 17 or 55 x 80 x 27 [mm]	1181386 or 1181387

The plug for the DC power can be connected:

- to a 9VDC Battery or Power Supply
- to a USB connector (standard USB cable must be cut and provided with power plug)

I use it with an old camera USB cord from which I cut off the camera end and replaced it with the DC plug in the list, using the 0 [V] and 5 [V] leads only. The center of the plug to the generator should be the positive terminal.

1.4.8 Connection Materials

To connect the components discussed before, a number of items are needed. These are listed in Table 1.4.8 on page 11. Note: for 20 groups, the items in Table 1.4.8 are needed 20 times!

The Farnell website mentions that the feedthrough terminator (item 2) is no longer in stock. If so, it can be emulated by using the BNC terminator,item 1 in combination with a T-junction,item 3. So we do not really need it.

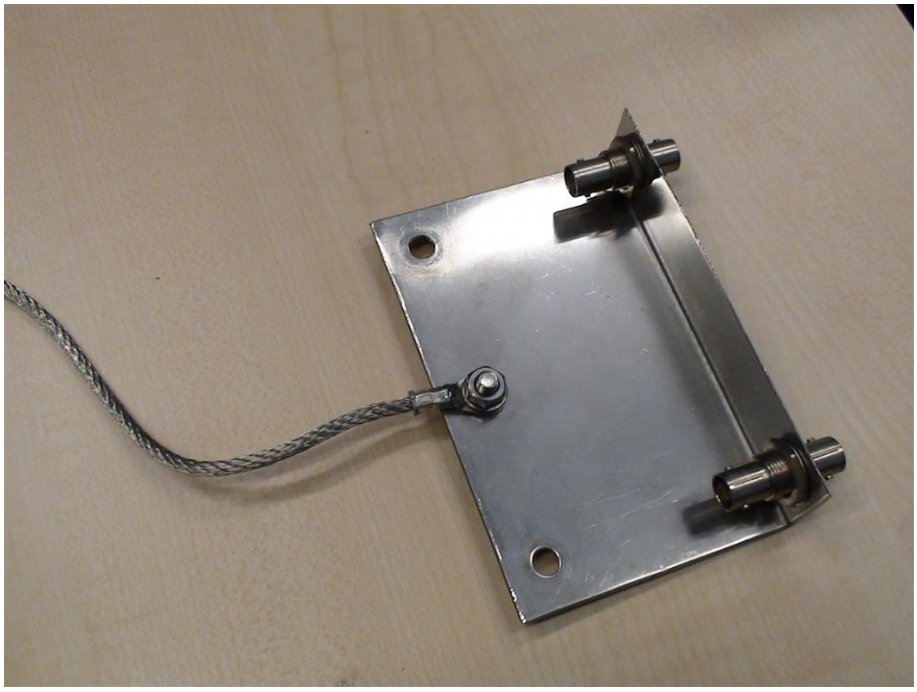

Figure 1.13: Detail of the Ground Cable Connection

Item	Description	pieces	Farnell Order No.
1	50Ω BNC terminator	2	1111313
2	50Ω BNC feedthrough (availability?)	2	1056279
3	50Ω BNC T-junction	2	1111302
4	50Ω BNC adaptor socket-socket	1	1169740
5	50Ω BNC adaptor jack-jack	1	1462728
6	50Ω BNC plug (for twisted pairs (long + short), Single wires)	8	1111270
7	Standard RG58 coax cable with BNC connectors 1 [m]	4	1056119
8	USB power adapter 5V 0.7A for generator	1	1734526
or	if no USB special cable available:		
9	Power Adapter Egston Mainy N2EFSW3 90-264 VAC/9 VDC 1,33 A	1	1253081

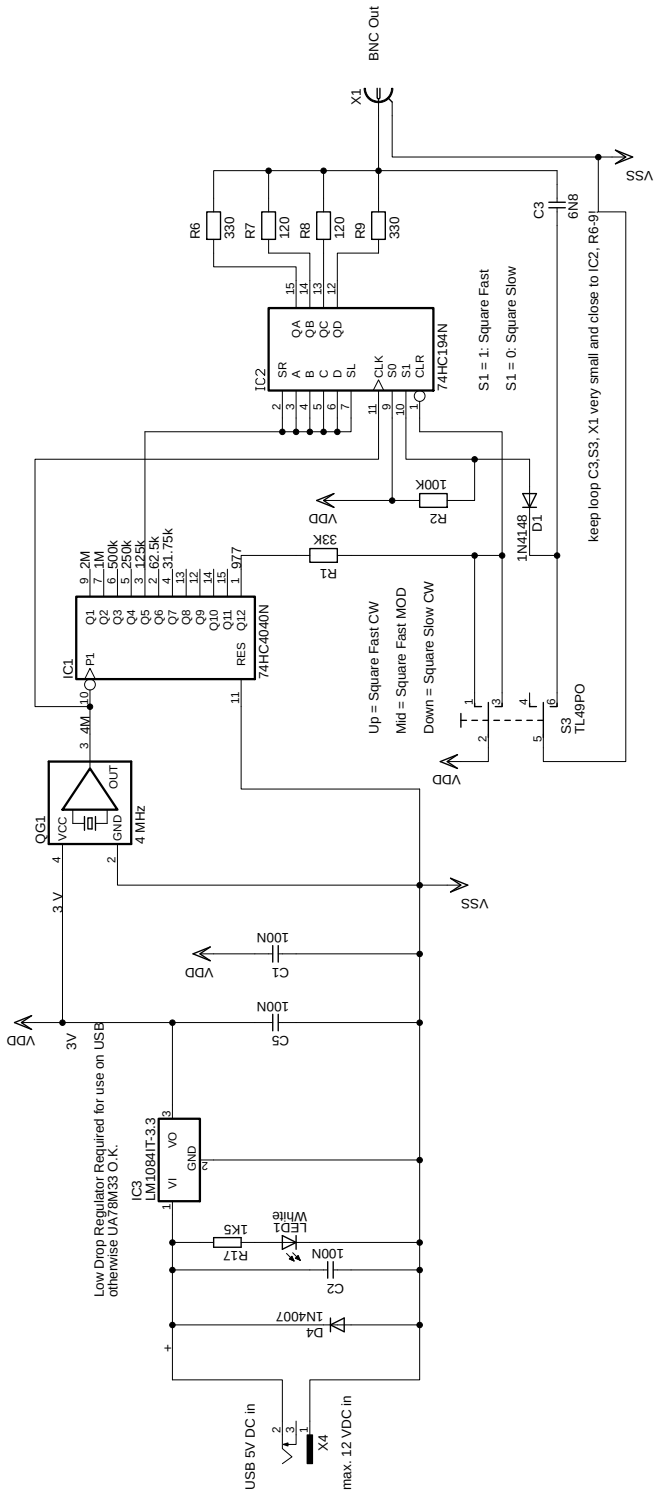

Figure 1.14: Small EMI Generator

The USB power supply (item 8) is intended for the case that a USB cord is used for the EMI generator. If not, the 9VDC power supply is needed (item 9).

1.4.9 Special Equipment to be built

A number of small modules have to be built for the experiments. These can be built by the students, given the availability of the necessary parts.

1.4.9.1 Magnetic Field Loop Probe (B-dot Probe)

Parts needed:

- 1 - 1.5 [m] of coax cable with BNC connectors (prefer RG316, RG58 O.K.)
- Heat shrinkable tube 5 [mm] wide, 60 [mm] long
- Solder
- Tools

From one standard coax cable with BNC connectors, two loop-probes can be built. The easiest version uses 1 - 1.5 [m] of RG316 coax cable. This cable is cut in half. 12 - 16 [cm] of the shield are removed. The end of the remaining shield is then tinned with solder. A 3 [cm] piece of heat shrinkable tubing is placed on the center wire. The end of the center wire is now soldered to this shield end as shown in Figure 1.15 on page 14. The heat shrinkable tube is shoved over the solder joint and heated to shrink. This completes the building procedure.
Note: the probes in Figure 1.15 on page 14 happen to have SMA connectors. This requires an SMA to BNC adaptor to be used with the students experimenter set. A probe built from RG58 is shown in Figure 1.16on page 14.

1.4.9.2 Basic Current Probe

The current probe measures AC currents in wires and cables. To build this probe we need the following:

- Ferrite Ring, e.g. Fair-Rite material 43 item number 5943002701 (see Figure 1.17.
- PVC insulated wire, 0.4 [mm] core, length 4 [m]
- Aluminium Bracket
- 50Ω BNC Bulkhead Jack, Farnell Order Code 1169699
- 2-component glue (or: hot glue)

The wire is wound around the core over a full circle (one layer coil). The result is shown in Figure 1.18 on page 15.

1.4.9.3 Magnetic Sniffer Probe

The magnetic field sniffer probe is built using a small, U-shaped ferrite core. The version shown in Figure 1.19 on page 17 is 10 [mm] wide and 3 [mm] high. In the center, there is 4 [mm] room for a few turns of AWG 30 insulated wire (e.g. wire wrap wire). The pictured version has 5 turns. The ends of this coil are then connected to a 50Ω BNC Bulkhead Jack Connector, Farnell Order code 1169699. The whole set can then be enclosed by heat shrinkable tubing or, better, a bracket can be bent to hold the BNC connector and the ferrite U-core, and only then be enclosed by heat shrinkable tubing. Note: the actual size of the U-shaped core is not important. It could be up to 25 [mm] wide.
The end result looks as shown in Figure 1.19 on page 17.

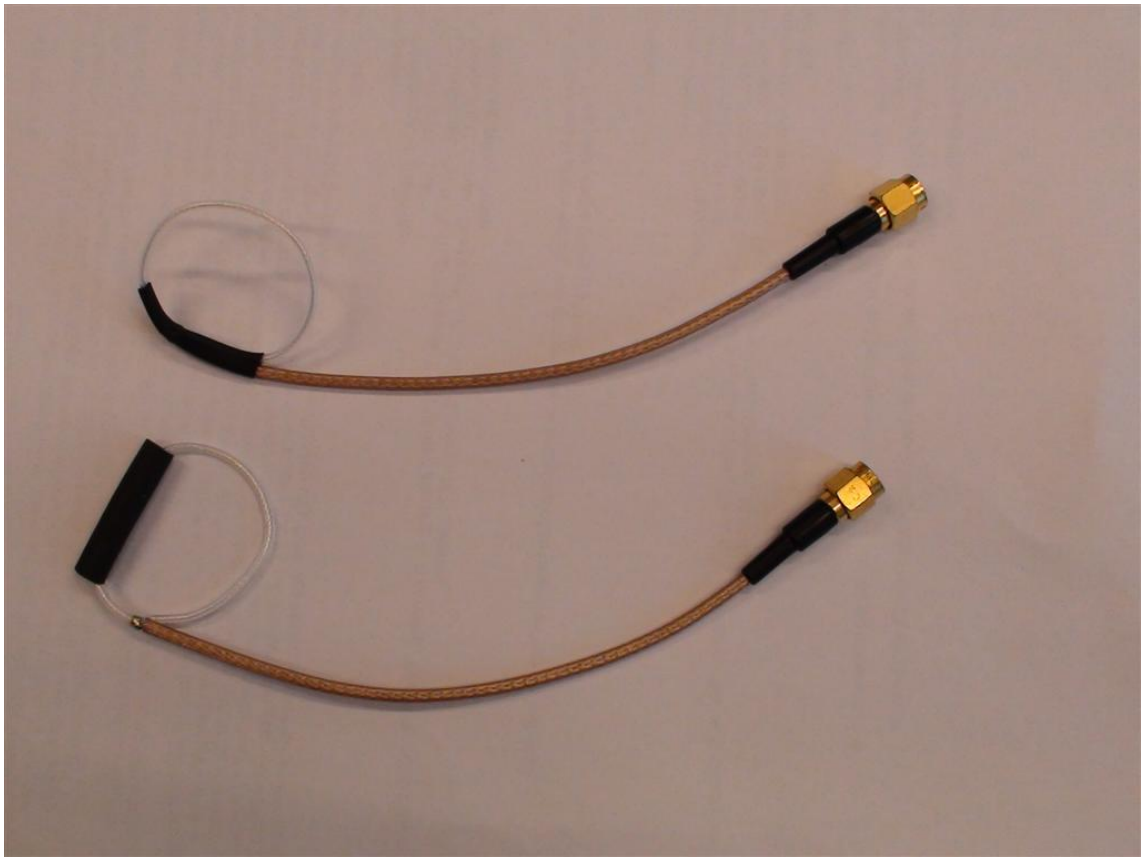

Figure 1.15: Two B-dot probes (for magnetic field) built from RG316 coax.

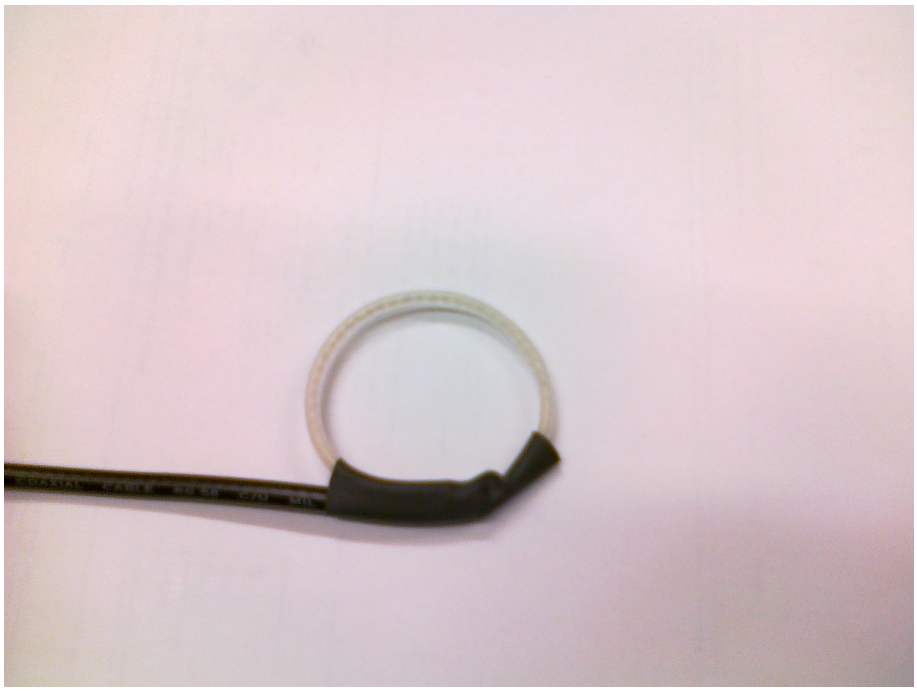

Figure 1.16: Loop-probe built from RG58

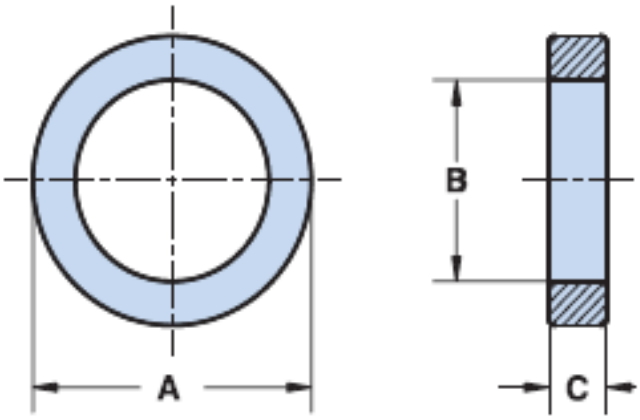

Figure 1.17: Fair-Rite Toroid Core for Current Probe, A=35.5, B=23, C=12.7 [mm]

Figure 1.18: Ring Type Current Probe Glued on Aluminium Bracket

1.4.9.4 Electric Sniffer Probe

The electric sniffer probe enables the student to detect electric fields. It is built from a brass rod of 60 [mm] long, 4 [mm] diameter. On one end a hole is drilled in the center of the rod of 2.5 [mm]. The rod is then soldered on the center pin of a 50Ω BNC Bulkhead Jack, Farnell Order code 1169699. The pin is then surrounded with heat shrinkable tube (5 [mm] inner diameter) to insulate it.
The end result looks as shown in Figure 1.20 on page 17.

1.4.9.5 Undershoot Protection for High Impedance Line

Items needed:

1. 4 [m] of UTP line (ES24) $\tau_{PD} = 16\ [ns]$ or $\tau_{PD} = 4.1\ \frac{[ns]}{[m]}$, impedance $120\ [\Omega]$, see Section 1.4.4
2. 2 T-junctions BNC see Section 1.4.8.
3. Junction BNC Male-Male, see Section 1.4.8
4. Series RC termination $120\ [\Omega] + 150\ to\ 180\ [pF]$ on BNC Female bulkhead plug, see Figure 1.21 on page 18.
5. Solder
6. Heat shrinkable tubing 40 [mm] long, 12 [mm] wide

The extra item to be built here is the termination element, consisting of a 50Ω BNC bulkhead jack (Farnell item 1169699), a resistor and a capacitor.

Figure 1.19: Magnetic Field (B-dot) Probe

Figure 1.20: Electric Field (D-dot) Probe

Figure 1.21: RC termination element for long UTP line experiment